Diamètre piézoélectrique de plaque de gaufrette en céramique piézoélectrique 12MM, 15MM, 18MM, 20MM, 27MM, 35MM, 50MM, cuivre, fil de liaison, pour le haut-parleur de sonnerie (1)
(2) plaque de gaufrette piézoélectrique piézoélectrique en céramique diamètre 35MM, 50MM. Cuivre, pour sonnerie

Buzzer | Buzzer 35mm copper

BUZZER SPECIFICATION

Customer		Spec.FT-35T-2A1
1	RESONANT FREQUENCY	2. 6±0. 5KHZ
2	RESONANT IMPEDANCE	≤250Ω
3	STATIC CAPACITY	35000±30%PF
4	PLATE MATERIAL	BRASS
5	Diameter of metal plate	35±0. 1
6	Ceramic piece diameter	25±0. 2
7	Metal plate thickness	0. 18±0. 02
8	Total thickness	0. 43±0. 03
9	ALLOWABLEINPUT VOLT	Vp-p max 1.5~30v
10	OPERATING TEMP	-20℃ ~70℃
11	Appearance Quality	Smooth and clean, no obvious mechanical damage.
12	Welding strength of silver layer	After welding 0.15×7 multi-stranded wires, bear the tensile force of 2.5N in the vertical direction and 20N in the horizontal direction, the silver layer has no mechanical damage.
13	Bond strength	After the diameter of the connected tiles is bent, no tiles will fall off, but cracks are allowed

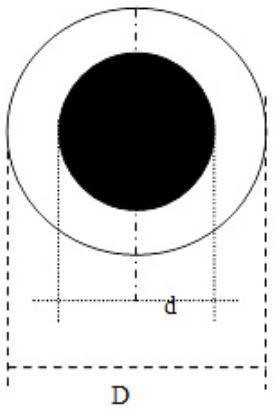

Piezoceramic Elements

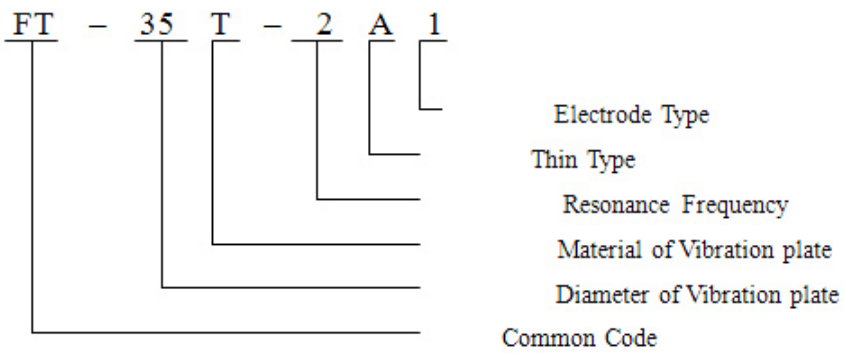

Buzzer

Buzzer 50MM copper

BUZZER SPECIFICATION

Customer		Spec. Φ 50T#18*25A#25
1	RESONANT FREQUENCY	3. 2 ± 0. 3KHZ
2	RESONANT IMPEDANCE	⩽200Ω
3	STATIC CAPACITY	42000 ± 30%PF
4	PLATE MATERIAL	BRASS
5	Diameter of metal plate	50 ± 0. 1
6	Ceramic piece diameter	25 ± 0. 2
7	Metal plate thickness	0. 18 ± 0. 02
8	Total thickness	0. 45 ± 0. 03
9	ALLOWABLEINPUT VOLT	Vp-p max 1.5~30v
10	OPERATING TEMP	-20℃ ~70℃
11	Appearance Quality	Smooth and clean, no obvious mechanical damage.
12	Silver layer welding strength welding	After welding 0.15×7 multi-stranded wires, bear the tensile force of 2.5N in the vertical direction and 20N in the horizontal direction, the silver layer has no mechanical damage.
13	Bond strength	After the diameter of the connected tiles is bent, no tiles will fall off, but cracks are allowed

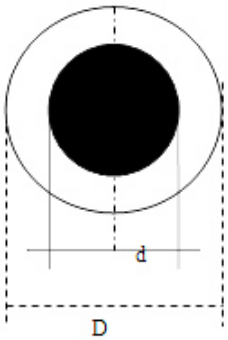

Piezoceramic Elements

FT – 50 T – 3 A 1

- 1: Electrode Type
- A: Type
- 3: Resonance Frequency
- T: Material of Vibration plate
- 50: Diameter of Vibration plate
- FT: Common Code

Instruments used: 1) signal generator 2) frequency meter 3 capacitance meter 4 multimeter 5) vernier caliper

Piezoelectric ceramic buzzer for welding wire

Buzzer piece diameter 12 / 15 / 18 / 20 / 27 / 35 / 50mm copper piece

Product introduction

Piezoelectric ceramic buzzer is a kind of device used in piezoelectric ceramic chip. Titanium and piezoelectric ceramic sheets (PZT) made of zirconium and lead oxides and sintered are more common. Because human ears are most sensitive to 3kHz audio signals, the resonant frequency of buzzer sheets is usually designed at about 3kHz in production. In order to improve the low-frequency response, the double diaphragm structure is generally used.

2	Inside Diameter	19mm±0.2mm
3	Thickness	0.15mm±0.05mm
4	Thickness	0.35mm±0.05mm
Remarks		

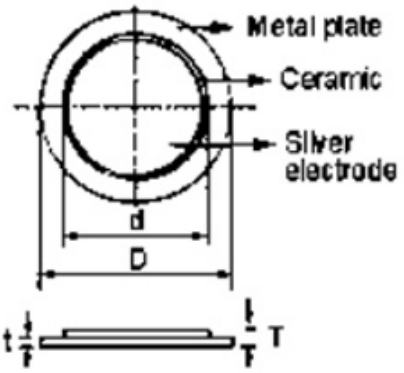

1	RESONANT FREQUENCY	16.5±0.7KHZ
2	RESONANT IMPEDANCE	≤400Ω
3	STATIC CAPACITY	5000±30%PF
4	PLATE MATERIAL	BRASS
5	Metal plate diameter (d)	12±0.1
6	Diameter of ceramic plate (d)	10±0.2
7	Metal plate thickness (T)	0.13±0.03
8	Total thickness (H)	0.33±0.05
9	ALLOWABLEINPUT VOLT	Vp-p max 1.5~30v
10	OPERATING TEMP	-20℃ ~70℃
11	Appearance quality	Flat and clean without obvious mechanical damage.
12	Welding strength of silver layer	Welding 0.15 × 7. After the multi strand conductor bears the tensile force of 2.5N in the vertical direction and 20N in the horizontal direction, the silver layer has no mechanical damage.
13	Bond strength	After the diameter of the connecting porcelain piece is bent, no porcelain piece falls off, but cracking is allowed

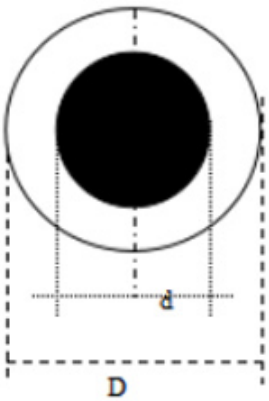

Piezoceramic Elements

FT – 12 T – 16 A 1

- 1: Electrode Type
- A: Thin Type
- 16: Resonance Frequency
- T: Material of Vibration plate
- 12: Diameter of Vibration plate
- FT: Ceramic Code

10	OPERATING TEMP	-20℃ ~70℃
11	Appearance quality	Flat and clean without obvious mechanical damage.
12	Welding strength of silver layer	Welding 0.15 × 7. After the multi strand conductor bears the tensile force of 2.5n in the vertical direction and 20n in the horizontal direction, the silver layer has no mechanical damage.
13	Bond strength	After the diameter of the connecting porcelain piece is bent, no porcelain piece falls off, but cracking is allowed

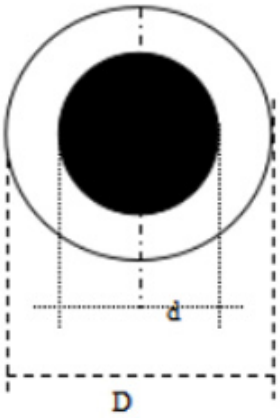

Piezoceramic Elements

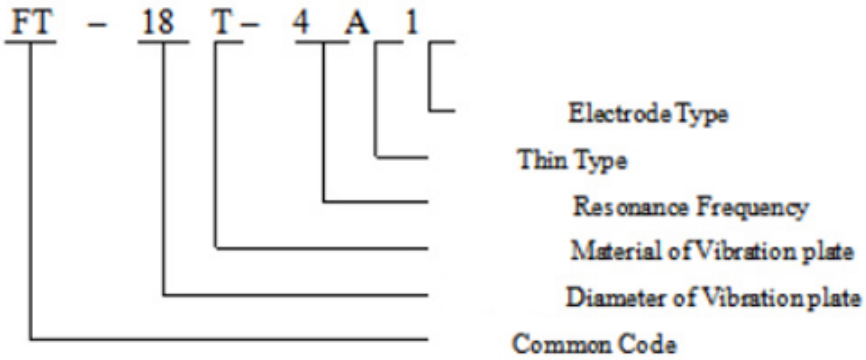

1	RESONANT FREQUENCY	6.8±0. 7KHZ
2	RESONANT IMPEDANCE	≤300Ω
3	STATIC CAPACITY	15000±30%PF
4	PLATE MATERIAL	BRASS
5	Metal plate diameter (d)	20±0.1
6	Diameter of ceramic plate (d)	15±0.2
7	Metal plate thickness (T)	0.16±0.03
8	Total thickness (H)	0.30±0.05
9	ALLOWABLEINPUT VOLT	Vp-p max 1.5~30v
10	OPERATING TEMP	-20℃ ~70℃
11	Appearance quality	Flat and clean without obvious mechanical damage.
12	Welding strength of silver layer	Welding 0.15 × 7. After the multi strand conductor bears the tensile force of 2.5n in the vertical direction and 20n in the horizontal direction, the silver layer has no mechanical damage.
13	Bond strength	After the diameter of the connecting porcelain piece is bent, no porcelain piece falls off, but cracking is allowed

Piezoceramic Elements

FT 20 T 4 A 1

1	RESONANT FREQUENCY	3.2±0.3KHZ
2	RESONANT IMPEDANCE	≤200Ω
3	STATIC CAPACITY	42000±30%PF
4	PLATE MATERIAL	BRASS
5	Metal plate diameter (d)	50±0.1
6	Diameter of ceramic plate (d)	25±0.2
7	Metal plate thickness (T)	0.18±0.02
8	Total thickness (H)	0.45±0.03
9	ALLOWABLEINPUT VOLT	Vp-p max 1.5~30v
10	OPERATING TEMP	-20℃ ~70℃
11	Appearance quality	Flat and clean without obvious mechanical damage.
12	Welding strength of silver layer	Welding 0.15 × 7. After the multi strand conductor bears the tensile force of 2.5n in the vertical direction and 20n in the horizontal direction, the silver layer has no mechanical damage.
13	Bond strength	After the diameter of the connecting porcelain piece is bent, no porcelain piece falls off, but cracking is allowed

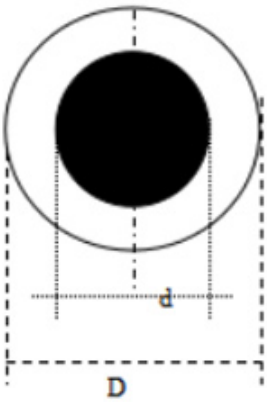

Piezoceramic Elements

FT - 50 T -3 A 1

- 电极型状 Electrode Type
- 薄型 Thin Type
- 谐振频率 Resonance Frequency
- 基片材料 Material of Vibration plate
- 基片直径 Diameter of Vibration plate
- 普码 Common Code

Products photography